OPL12

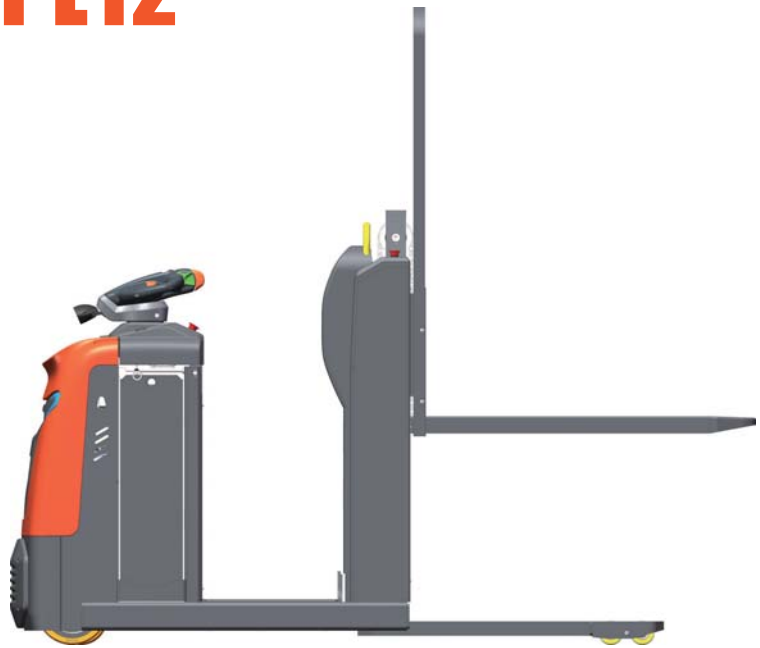

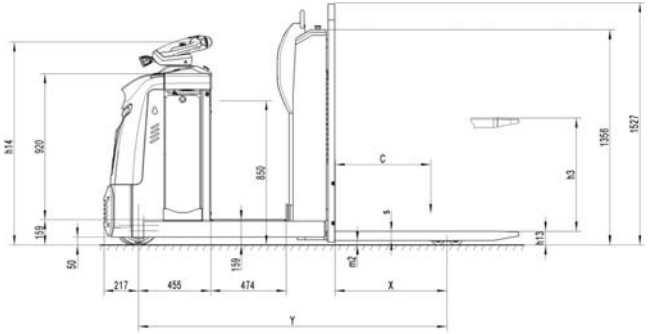

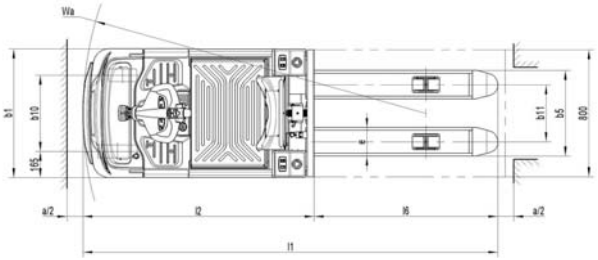

Type sheet for industrial truck acc. to VDI 2198

Distinguishing mark	1.2	Manufacturer`s type designation		OPL12
	1.3	Drive		Battery
	1.4	Operator type		Order-pucker
	1.5	Load Capacity / rated load	Q (t)	1.2
	1.6	Load centre distance	c (mm)	600
	1.8	Load distance ,centre of drive axle to fork	x (mm)	702
	1.9	Wheelbase	y (mm)	1940
Weight	2.1	Service weight	kg	900
	2.2	Axle loading, laden front/rear	kg	910 / 1532
	2.3	Axle loading, unladen front/rear	kg	813 / 429
Tires, chassis	3.1	Tires		Polyurethane(PU)
	3.2	Tire size,front	Øx w (mm)	Ø 250×80
	3.3	Tire size,rear	Øx w (mm)	Ø 82×82
	3.4	Additional wheels(dimensions)	Øx w (mm)	Ø 180×80
	3.5	Wheels,number front/rear(x=driven wheels)		1+1x/4
	3.6	Tread, front	b_{10} (mm)	480
	3.7	Tread, rear	b_{11} (mm)	360
Dimensions	4.4	Lift	h_3 (mm)	720
	4.9	Height of tiller in drive position min./ max.	h_{14} (mm)	1280
	4.15	Height, lowered	h_{13} (mm)	87
	4.19	Overall length	l_1 (mm)	2570[1)]
	4.20	Length to face of forks	l_2 (mm)	1414[1)]
	4.21	Overall width	b_1 (mm)	810
	4.22	Fork dimensions	s/e/l (mm)	60/180/1150
	4.25	Width across forks	b_5 (mm)	540
	4.32	Ground clearance, centre of wheelbase	m_2 (mm)	25
	4.34	Aisle width for pallets800X1200 lengthways	Ast (mm)	2812[2)3)]
	4.35	Turning radius	Wa (mm)	2115[2)]
Performance data	5.1	Travel speed, laden/ unladen	km/h	9 / 12
	5.2	Lift speed, laden/ unladen	mm/s	90/140
	5.3	Lowering speed, laden/ unladen	mm/s	250/200
	5.8	Max. gradeability, laden/ unladen	%	6 / 12
	5.10	Service brake		Eletromagnetic
Electric- engine	6.1	Drive motor rating S2 60min	kW	2.6
	6.2	Lift motor rating at S3 10%	kW	2.2
	6.3	Battery acc. to DIN 43531/ 35/ 36 A, B, C, no		No,3PzS
	6.4	Battery voltage, nominal capacity K5	V / Ah	24 / 465
	6.5	Battery weight	kg	352
	6.6	Energy consumption acc. to VDI cycle	kWh/h	0.7
Additional data	8.1	Type of drive control		AC speed Control
	8.4	Sound level at driver`s ear acc. to EN 12053	dB(A)	<70
	8.6	Steering		Electric steering

1)、With bumper l_1=2610mm，l_2=1454；

2)、With bumper Wa=2155mm，Ast=2852mm；

3)、According to the VDI diagonal algorithm Ast=original measurement+140mm。